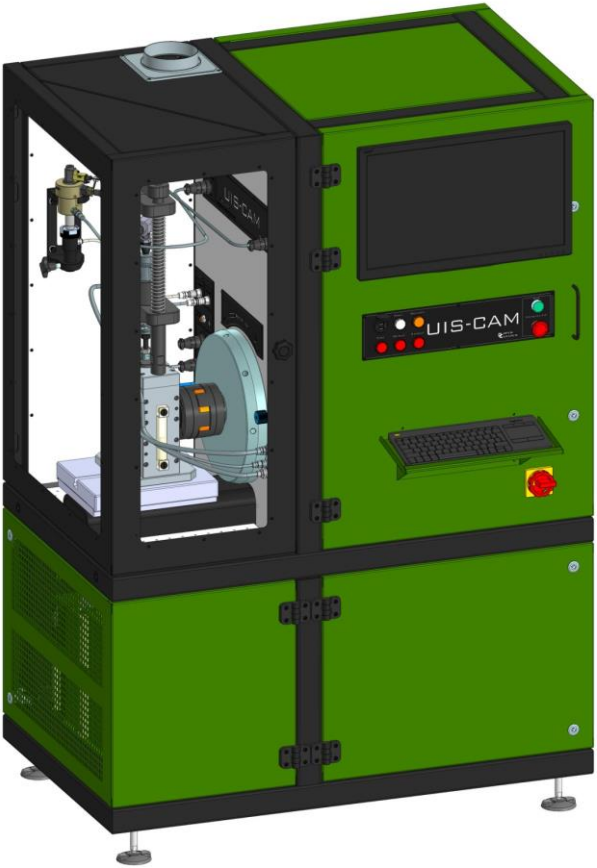

UIS and UPS Inspection and Testing Equipment
Test bench UIS-CAM

Overview of components and accessories

2020

Version 1.04

The content

1. The test bench UIS-CAM

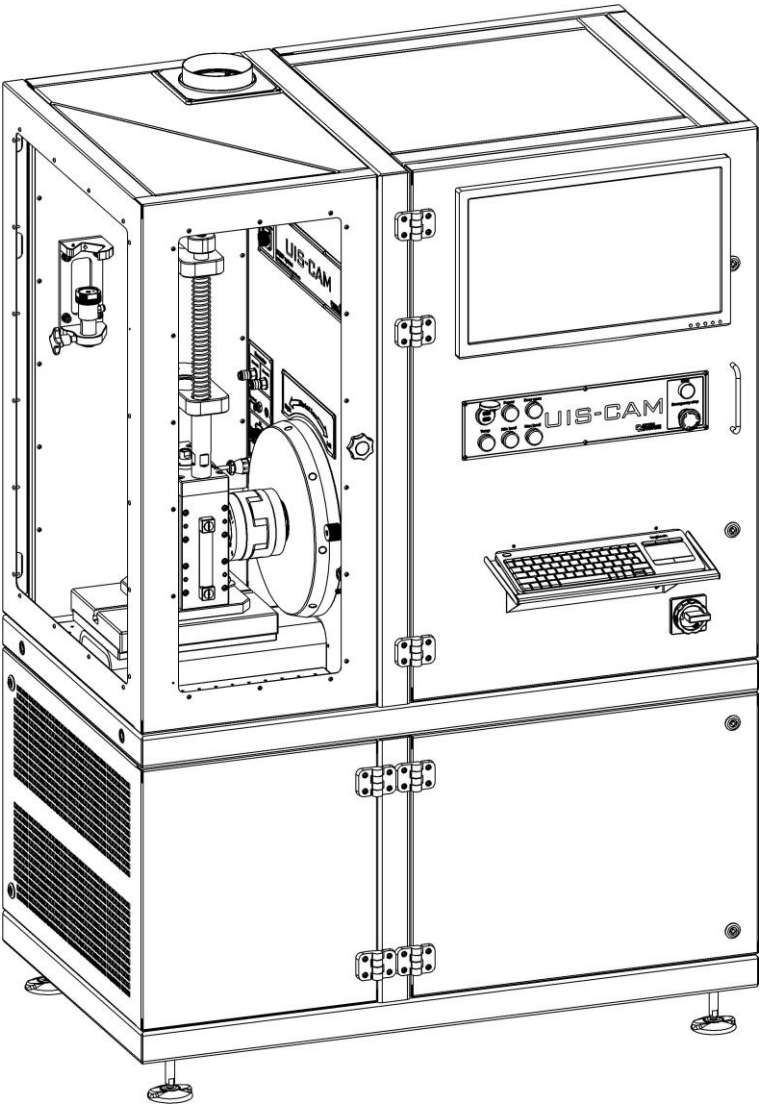

Figure 1.Exterior view of the bench

2. Short description

UIS-CAM is a test bench for testing and coding of UIS electronically controlled unit injectors and UPS pump sections.

For the mechanical drive UIS-UPS, CAM-BOX OS V1 is used. The required amount of linear and angular movement is ensured by changing the cam of the drive mechanism to the desired one with the appropriate profile.

Characteristics:

Drive motor power	7.5KW / 10hp;
Supply voltage	3x400 / 230V AC 50Hz;
Rated current	16A;
Speed control range	100-2500rpm;
Stability of rotation frequency	± 1 rpm;
Test liquid tank capacity	45l;
Contaminated liquid tank capacity	8L;
Oil tank capacity	3L;
Test liquid supply pressure maximum	7bar;
Test liquid flow at a maximum pressure of	8 l / min;

The pressure of the supplied compressed air is 4-8bar;

Measuring range of the measuring unit	0.01-400mm3 / injection;
Measurement error in the range	0.01-100mm3 1%;
Measurement error in the range	0.01-400mm3 1.5%;
Resolution	0.01mm3 / injection;
Overall dimensions HxWxD	1615x1170x700mm;
Drive shaft axis height	125mm;

Net weight (excluding liquids and installation kit) 900kg;

Used liquids:

Test Fluid Calibration Oil	ISO 4113;
Lubrication system Motor oil	10-40W.

3. Working area of the UIS-CAM test bench

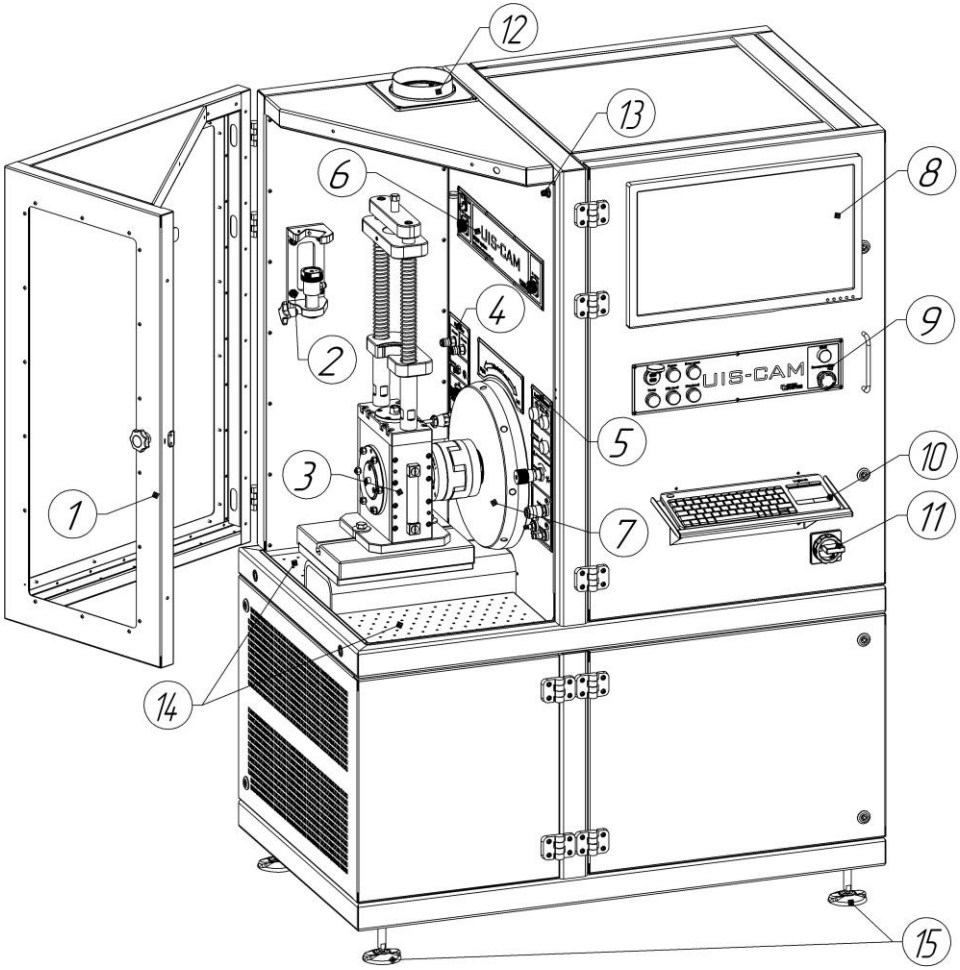

Figure 2. Working area of test bench

The following elements are located in the working area of the UIS-CAM test bench:

Position	Description
1	Test compartment security door
2	Test injector holder
3	Mechanical drive CAM-BOX OS V1
4	"Flowmeter" panel
5	Hydraulic Control Panel
6	Working area panel
7	Flywheel
8	Monitor
9	Front panel
10	Shelf for keyboard
11	Main power switch for the test bench
12	Exhaust system connection flange
13	Test compartment door close sensor
14	Drain pan grates
15	Adjustable feet

In the protective door of the test compartment, polycarbonate is used as a light-transmitting element. Thickness 10mm. When cleaning the surface, do not use cleaners containing alcohol or abrasive particles. When using them, scratches and dullness of the surface are possible.

The drive can only start rotating when the test compartment door is closed.

The monitor and the shelf for the keyboard of the stand have the ability to adjust the installation height. If necessary, the installation height should be adjusted for the master working on the test bench.

For precise installation of the stand on the floor, there are adjustable feet below. Install the stand horizontally in the room by adjusting the length of the support.

4. Compartment of working containers of the UIS-CAM test bench

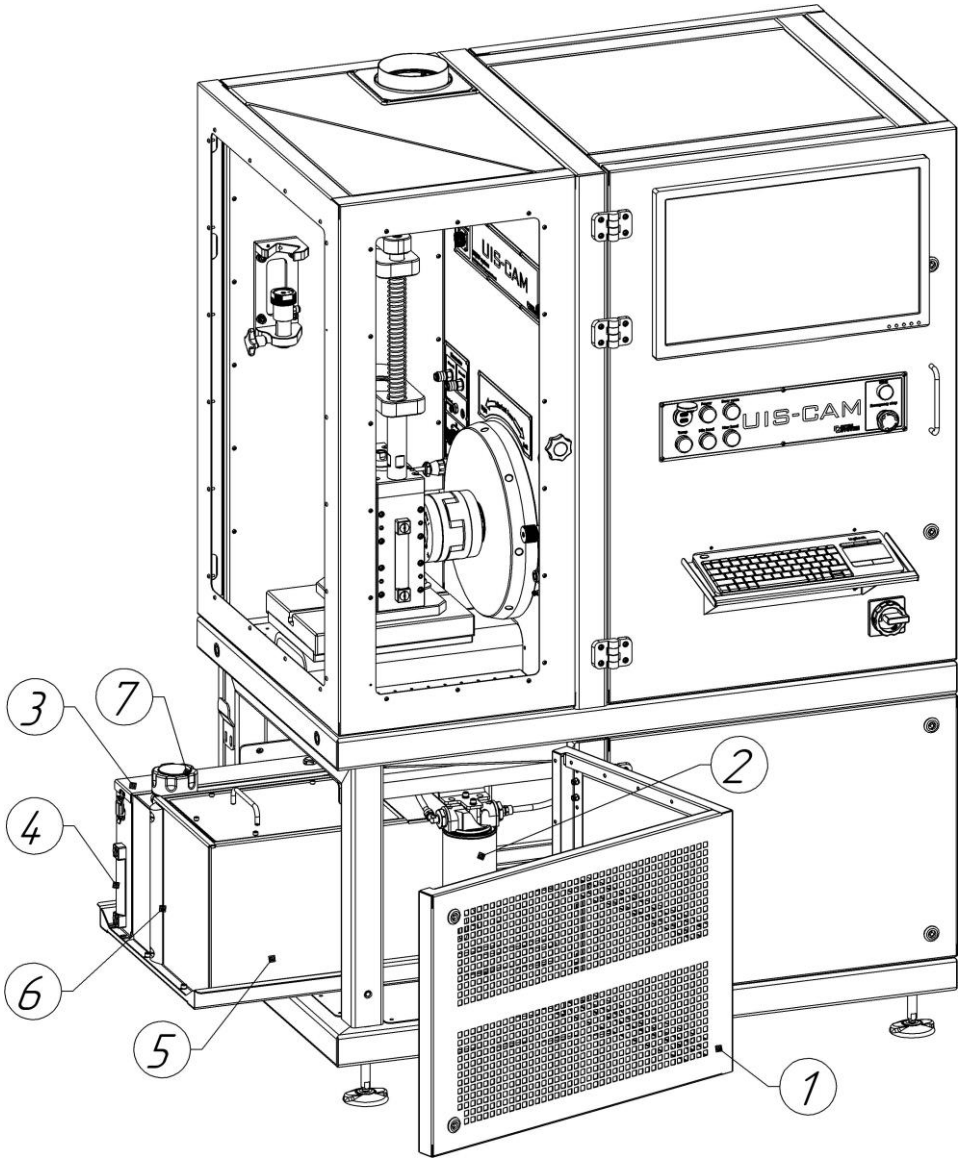

Figure 3. Compartment of working capacities of the test bench

The compartment for installing the working capacities of the test bench is located in the front part. The compartment contains the following elements:

Position	Description
1	Door
2	Fine filter for the test liquid supply line
3	Contaminated liquid collection tank
4	Level indicator in the dirty liquid tank
5	Test liquid tank
6	Level indicator in the test liquid tank
7	The filler neck of the test liquid

Depending on the intensity of use, the purity of the UIS-UPS components installed for testing, but at least once a year, the fine filter of the test fluid supply line should be replaced.

An indicator for visual control of the liquid level is installed in the contaminated liquid tank. During the work of the stand, you should not exceed the middle of the indicator range. In case of overfilling, the liquid should be drained through the tap at the bottom of the tank. After draining, turn off the tap.

The drained liquid must be disposed of; do not refill the test liquid tank. Tank overflow is indicated by a warning lamp on the panel and on the stand monitor when the control program is running.

It is recommended to keep the liquid level in the tank of the test liquid not lower than the middle of the indicator range, optimally 2/3 of the range. This will ensure smooth operation of the test liquid thermal stabilization system. A critically low level is indicated by a signal lamp on the panel and on the stand monitor when the control program is running. This turns off the heating of the tank using the heating element. Further work is possible after filling the tank to the desired level. Filling is carried out through the filler neck.

For routine maintenance of the tank or repair of the stand, the liquid from the tank should be drained through the tap at the bottom of the tank. After draining, turn off the tap.

5. Pump compartment of the UIS-CAM test bench

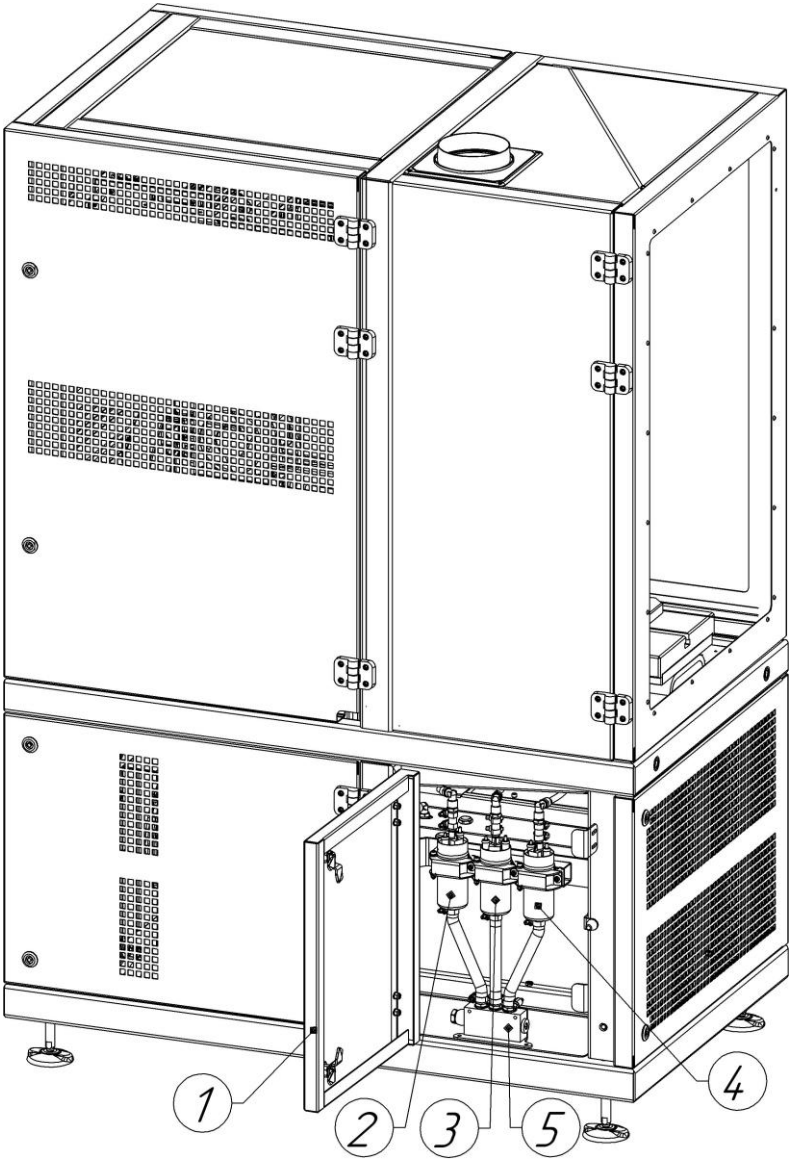

Figure 4. Pumps compartment

The following elements are located in the pump compartment of the test bench:

Position	Description
1	Pump compartment door
2	Cooling pump
3	Booster pump No. 1
4	Booster pump No. 2
5	Distribution manifold

To create pressure in the test liquid supply system and to cool the components of the stand, electric pumps are installed in the stand.

During the operation of the stand, the pumps are not serviceable. Once a month, you should inspect the connections for leaks, and if found, eliminate them.

6. Compartment of measurement and preparation of air

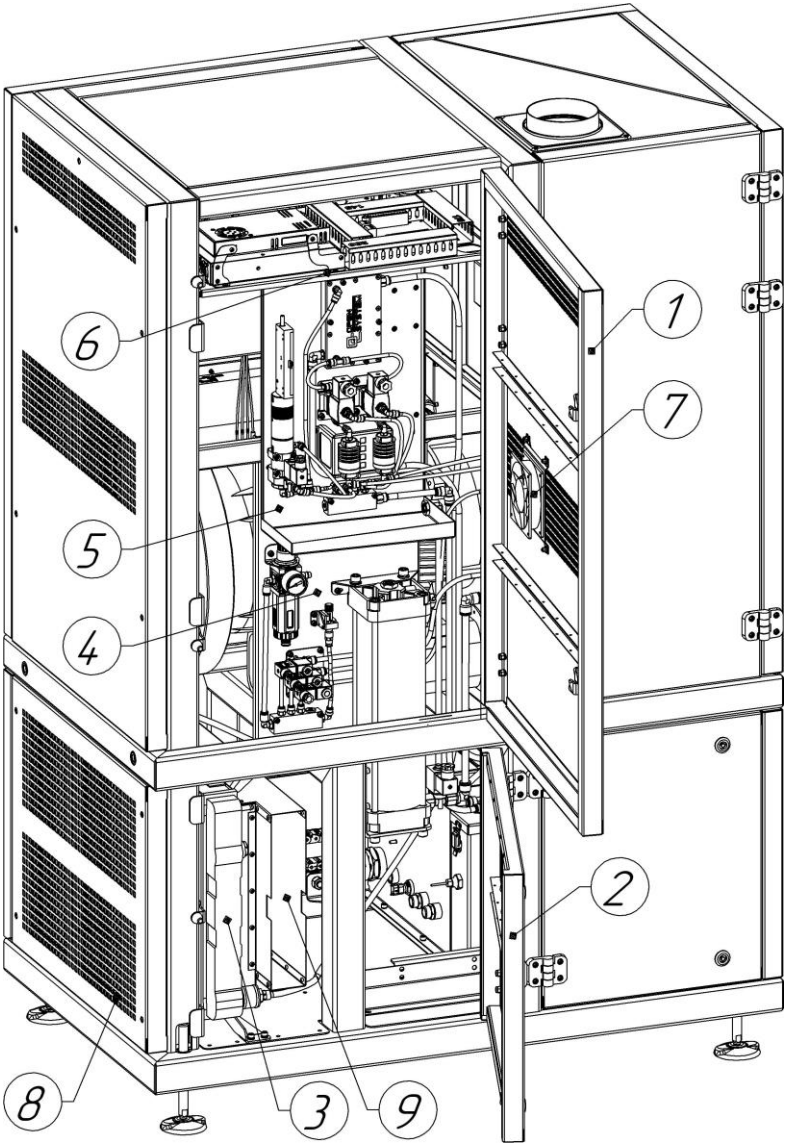

Figure 5. Compartment of measurement and preparation of air

The compartment for measuring and preparing air contains:

Position	Description
1	Top door
2	Lower door;
3	Radiator for cooling the test liquid in the tank;
4	Pneumatic system panel;
5	Measuring system panel without measuring;
6	Electronics panel;
7	Cooling fan of the measuring system;
8	Air intake plane of the cooling system;
9	Cooling system outlet duct.

During installation, as well as during the operation of the test bench, care should be taken not to block the air supply for air intake and release from the test fluid cooling system. Cutting off the air flow will overheat the test fluid in the tank.

7. Measuring system panel

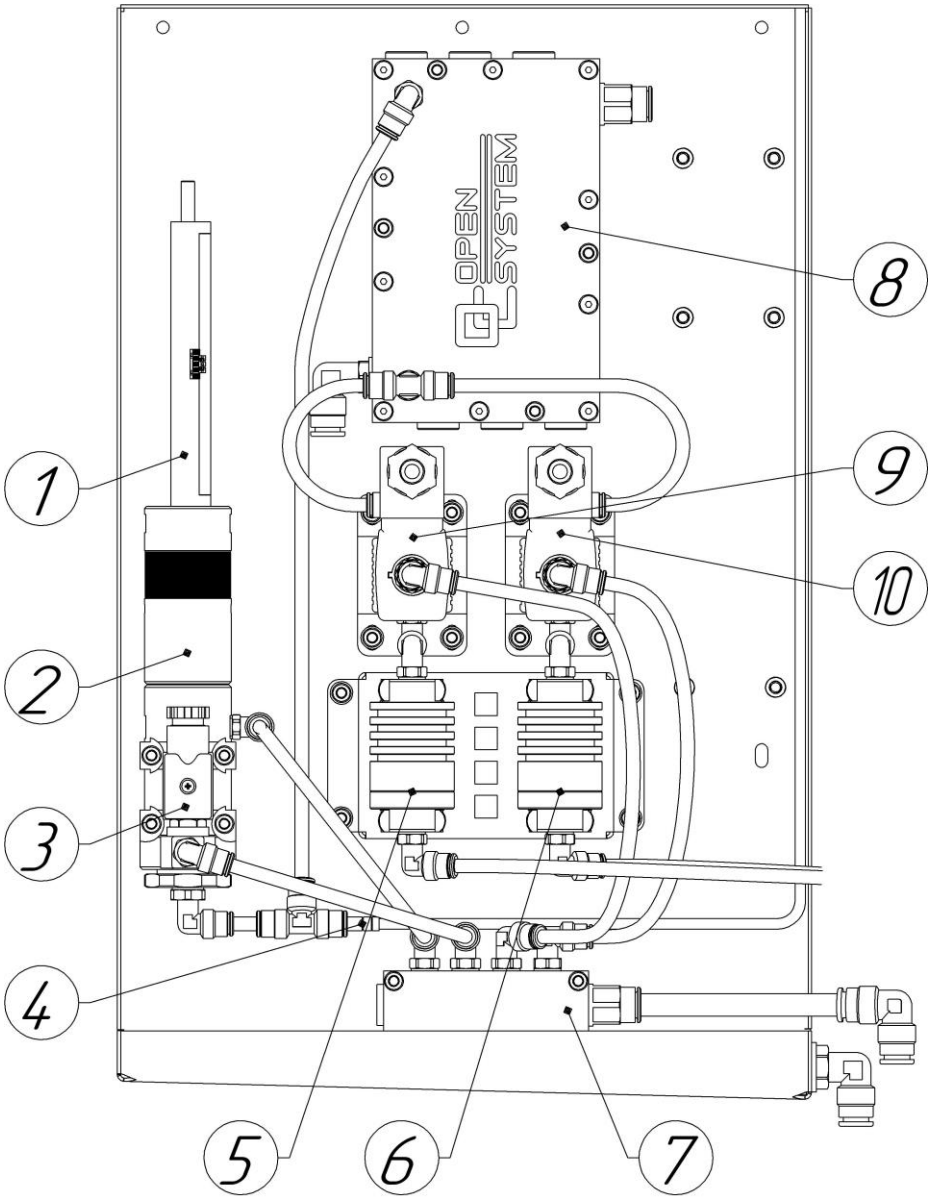

Figure 6. Measuring system panel

The meterless system for measuring the performance of the tested components UIS \ UPS of the test bench consists of the following components:

Position	Description
1	Linear displacement sensor;
2	Measuring unit;
3	Drain valve;
4	Temperature sensor;
5	Measurement channel filter housing # 1;
6	Measurement channel filter housing # 2;
7	Connecting manifold;
8	Test liquid cooling heat exchanger;
9	Measurement channel valve No. 1;
10	Measurement channel valve No. 2.

Depending on the intensity of use, the purity of the UIS-UPS components installed for testing, but at least once every 6 months, the filter of the measurement channels should be cleaned. To do this, remove the filter housing from the mounting bracket, disconnect the quick-release hydraulic connections, unscrew the housing, and remove the filter element. Rinse the filter element in an ultrasonic bath with EUI-EUP component cleaning liquid, blow in the opposite direction with a jet of compressed air. In case of severe contamination, impossibility of cleaning or mechanical damage, the filter element should be replaced. Installation of the filter element, assembly of the filter housing, installation on the stand, should be carried out in the reverse order.

8. Pneumatic system panel

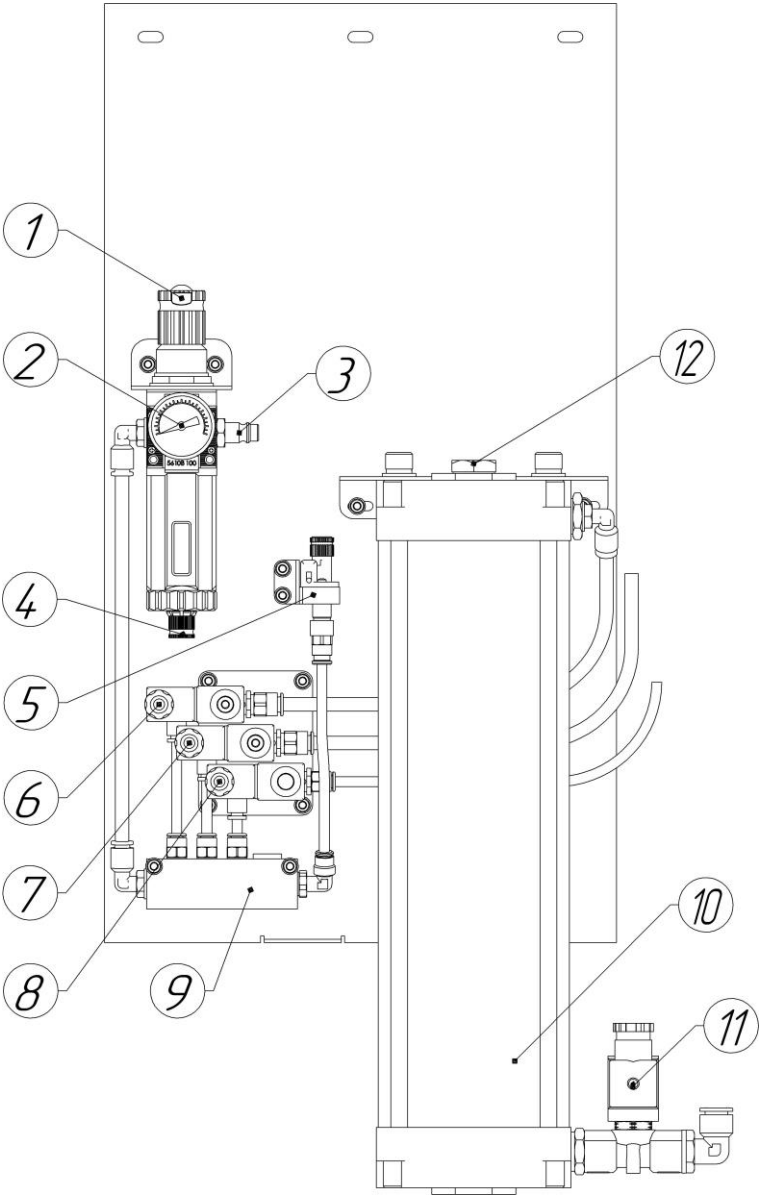

Figure 7. Pneumatic system panel

To ensure cooling of the Load cell sensor and the oil drain / fill system, an air preparation unit is installed in the Cam-box. Main components:

Position	Description
1	Filter pressure regulator
2	Pressure gauge in the pneumatic system;
3	Compressed air connection;
4	Automatic condensate drain connection;
5	Pressure control relay in the pneumatic system;
6	Switching valve No.1;
7	Switching valve No.2;
8	Switching valve No. 3;
9	Distribution manifold;
10	Receiver of lubrication system Cam-box;
11	Shut-off valve;
12	Filler neck and oil level control.

The pressure regulator is set to 2.5 bar. When the pressure drops below 1.5 bar, the efficiency of the pneumatic cooling system of the Load cell load cell, which is used for UIS Delphi E1-E3 coding, decreases. This is monitored by a pressure switch, processed by the bench controller, the information is displayed on the bench monitor. Further work of the stand is impossible until the required pressure level is restored.

The same compressed air pressure is used for the oil drain / drain system in the Cam-box. A decrease in pressure below 2.5 bar leads to an increase in the oil drain and fill time.

9. Oil system

During a test run, it is necessary to fill the reservoir of the Cam-box lubrication system with approximately 2.5 liters of 10-40W engine oil. In this case, the oil level should be approximately 70-100mm below the upper level of the filler neck. During the work of the stand, it is necessary to check the oil level once a month. To do this, drain the oil from the Cam-box completely, until the supply hose is empty, unscrew the neck and check the level using the dipstick. Add if necessary.

If the oil level has risen by more than 50mm, this indicates the ingress of the Cam-box test liquid. Such oil, and also if during long-term operation the oil has become too liquid, it should be drained completely and replaced with a new one.

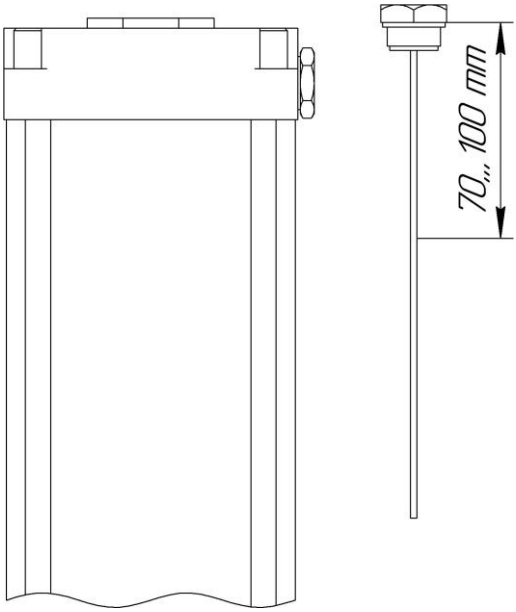

Figure 8. Checking the oil level in the system

After checking the oil level, screw the filler neck back on. The clamping force of the neck is 10-12 Nm.

When working with CAM-BOX OS V1, it is necessary to check the oil level inside its housing. An incorrect oil level can damage the Cam-box or the stand.

The correct oil level is in the center of the cam-box shaft, indicated in the figure OK Level.

Filling with oil above the maximum allowable level, indicated in the figure MAX Level, is NOT ALLOWED. This can lead to a disruption in the ventilation system of the housing, which in turn can lead to the destruction of the sealing seals of the Cam-box housing.

The minimum oil level is set based on the size of the cam mounted in the Cam-box. It is necessary to ensure constant contact of the cam face with the oil bath. You CANNOT work below this level.

To change the cam, the oil level must be lowered to the lower level, indicated in Figure 0 Level.

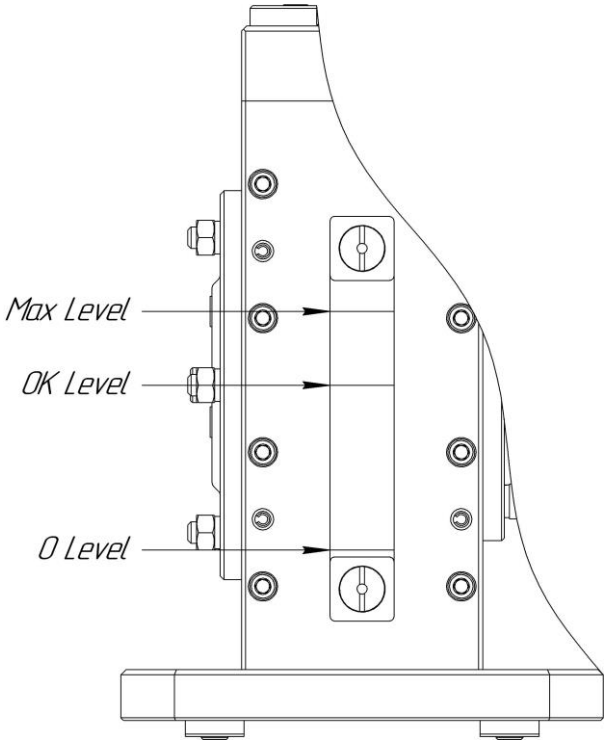

Figure 9. Oil level control in Cam-box

10. Electrical compartment of the test bench

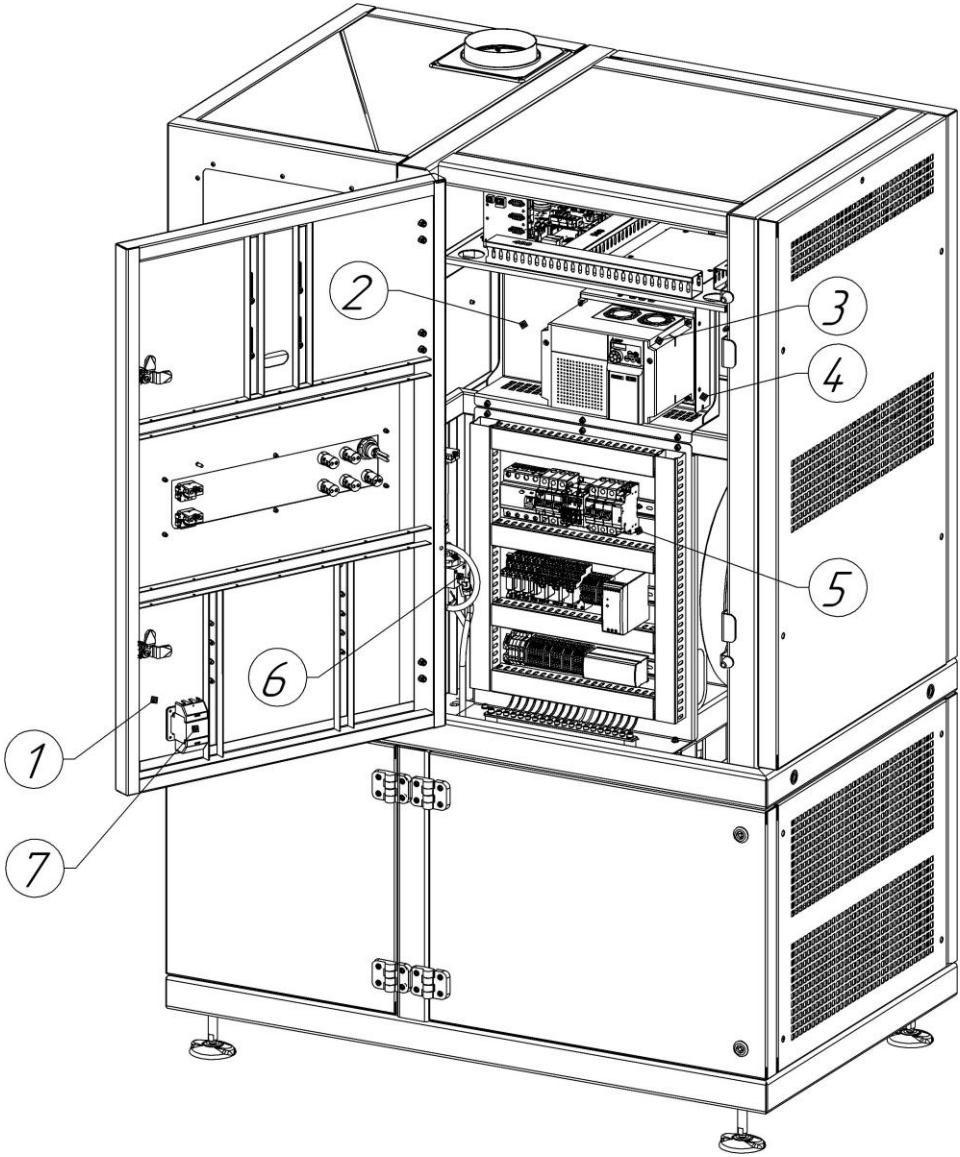

Figure 10. Electrical compartment of the test bench

Attention, access to the electrical compartment of the stand must be performed by a specialist with a permit and knowledge for working with high voltage.

The electrical compartment of the stand contains:

Position	Description
1	A door;
2	Frequency converter panel;
3	A frequency converter;
4	RFI filter;
5	Power electronics panel;
6	Pressure sensor in the test fluid supply line;
7	Main power switch for the stand.

Work in the electrical compartment should be carried out with the main switch of the stand disconnected.

It is prohibited to change the settings of the frequency converter during operation. This can lead to failure of the frequency converter and the electric motor of the stand drive.

To restrict free access to the electrical compartment by unauthorized persons, the compartment doors should be kept closed with restrictive locks.

11. Electric board

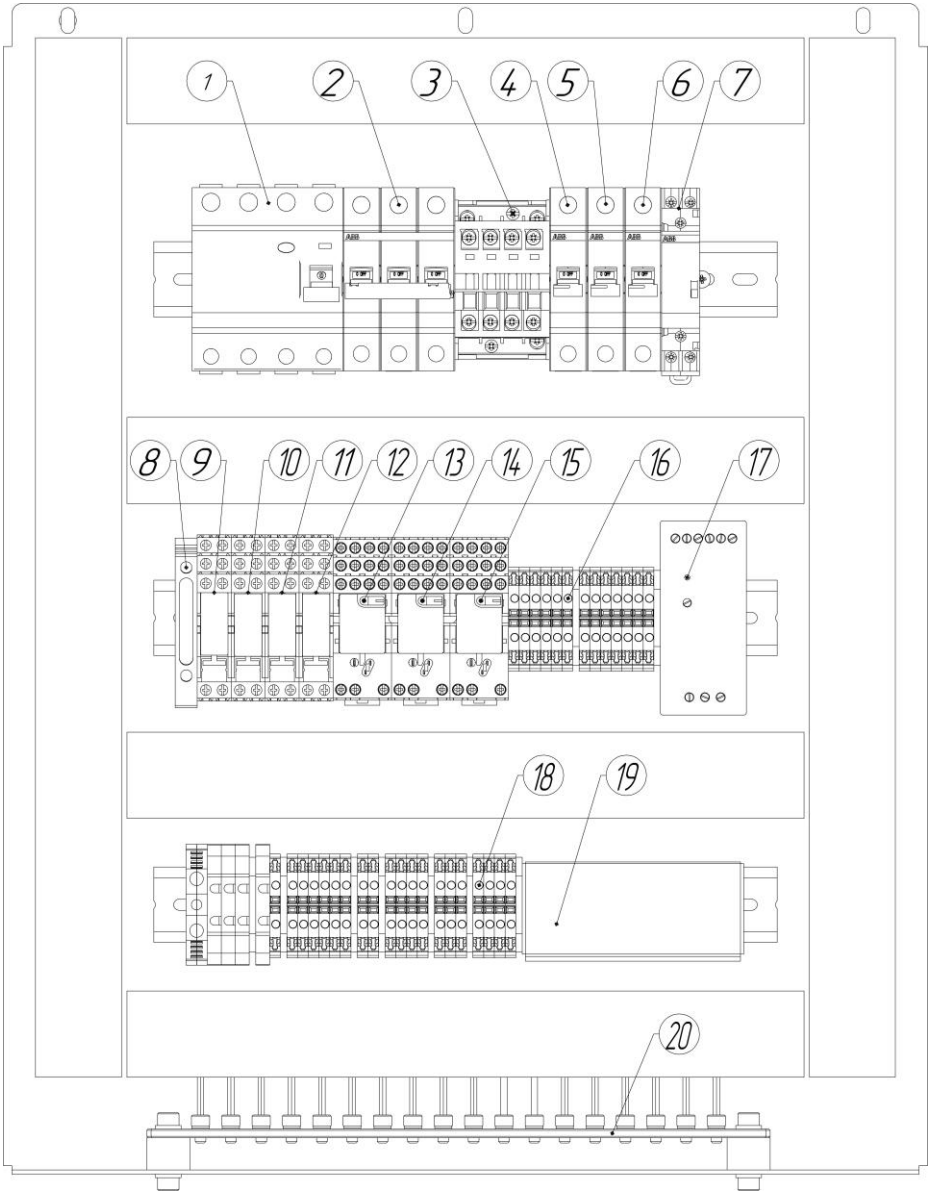

Figure 11. Electric board

Electrical devices for enabling and disabling the test bench are mounted on an electrical panel. The following components are installed:

Position	Description
1	Residual current device;
2	Main circuit breaker;
3	Magnetic switch;
4	Automatic group machine;
5	Automatic group disconnected;
6	TEN protection machine;
7	TEN activation relay;
8	Fuse holder;
9	Magnetic starter start relay;
10	Decoupling relay # 1;
11	Decoupling relay # 2;
12	Decoupling relay # 3;
13	Cooling fan start relay;
14	Cooling pump start relay;
15	Booster pump start relay;
16	Clem group;
17	Signal circuit power supply;
18	Clem group;
19	Connecting bus;
20	Grounding bus.

When the protective circuit breakers or RCDs are triggered, they should be turned on. In case of repeated tripping, you should look for the place of short circuit or current leakage in the components of the test bench.

12. The front panel

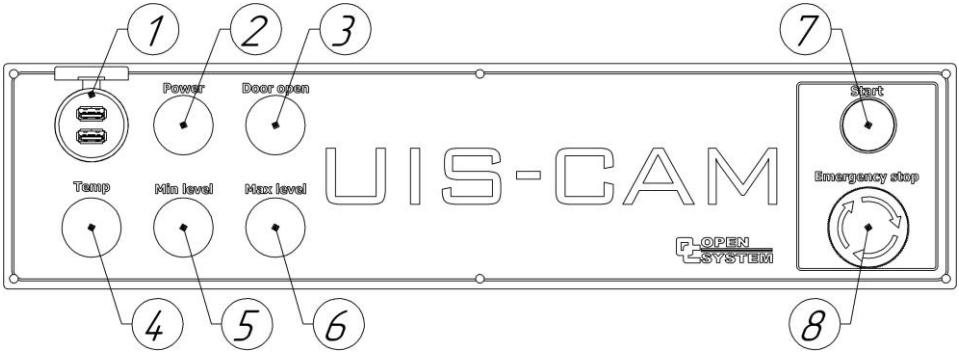

Figure 12. The front panel

The front panel contains:

Position	Description
1	2xUSB port;
2	Power indicator signal lamp;
3	Test compartment door opening warning light;
4	Warning lamp for the temperature of the test liquid in the tank;
5	Signal lamp for the level of the test liquid in the tank;
6	Signal lamp for level in the tank for dirty liquid;
7	Test bench activation button;
8	Test bench emergency shutdown button;

To turn on the stand, press the stand start button, in the figure it is marked Start. After that, the stand computer turns on, all consumers are started.

In case of an emergency, it is necessary to press the Emergency stop button of the stand, in this case, the stand drive will stop in an accelerated mode and all electrical consumers of the group to be switched off are switched off. To re-enable, you must unlock the emergency shutdown button by turning it clockwise.

13. The panel of the working area

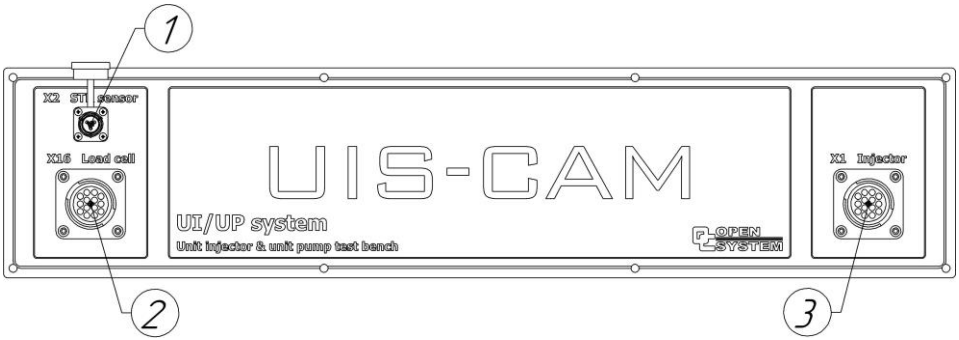

Figure 13. The panel of working area

On the panel, hydraulically control is located:

Position	Description
1	Injection sensor connector;
2	Load cell sensor connector;
3	EUI \ EUP electrical part connector.

14. The flowmeter panel

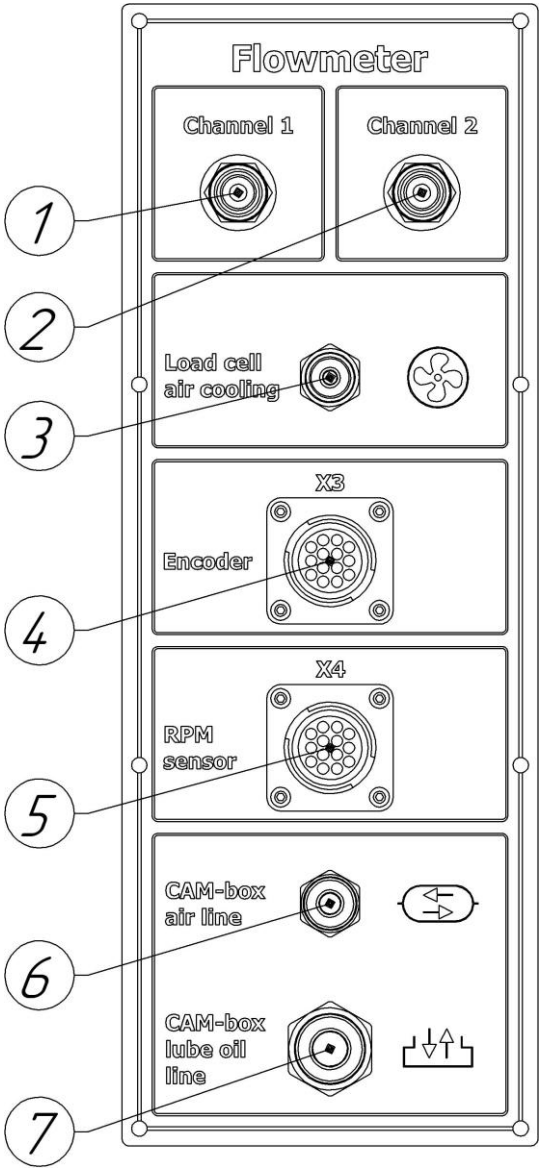

Figure 14. The flowmeter panel

The flowmeter panel contains the following connectors:

Position	Description
1	Couplung for connection to measurement channel # 1;
2	Couplung for connection to measurement channel # 2;
3	Connector for cooling the Load cell sensor;
4	Encoder connector;
5	RPM sensor connector;
6	Connector for connecting Cam-box to a pneumatic line;
7	Connector for connecting Cam-box to the oil line.

The test fluid supply by the UIS-UPS component under test is fed to port # 1. If it is necessary to measure backflow and EUI-EUP, the liquid is supplied to channel 2.

When coding EUI Delphi E1-E3, in order to stabilize and increase the accuracy of measurements of parameters by the Load cell sensor, it must be cooled. To do this, connect the connector on the flow meter panel with a pneumatic line and the corresponding connector on the adapter in the Cam-box. Further, the stand control program will turn on or off the cooling system as needed.

The connector for the encoder (angular displacement sensor) is not used when working with the CAM-BOX OS V1.

A speed sensor can be used to control the cam-box shaft position.

To operate the pneumatic oil drain / fill system and to ensure ventilation of the Cam-box body, a pneumatic line is connected to the connector on the panel, designated CAM-box air line with the connector on the Cam-box body.

For the operation of the oil drain / fill system, the Cam-box bodies are connected by an oil line to the connector on the panel, marked CAM-box lube oil line with the connector on the Cam-box body.

15. Hydraulic control panel

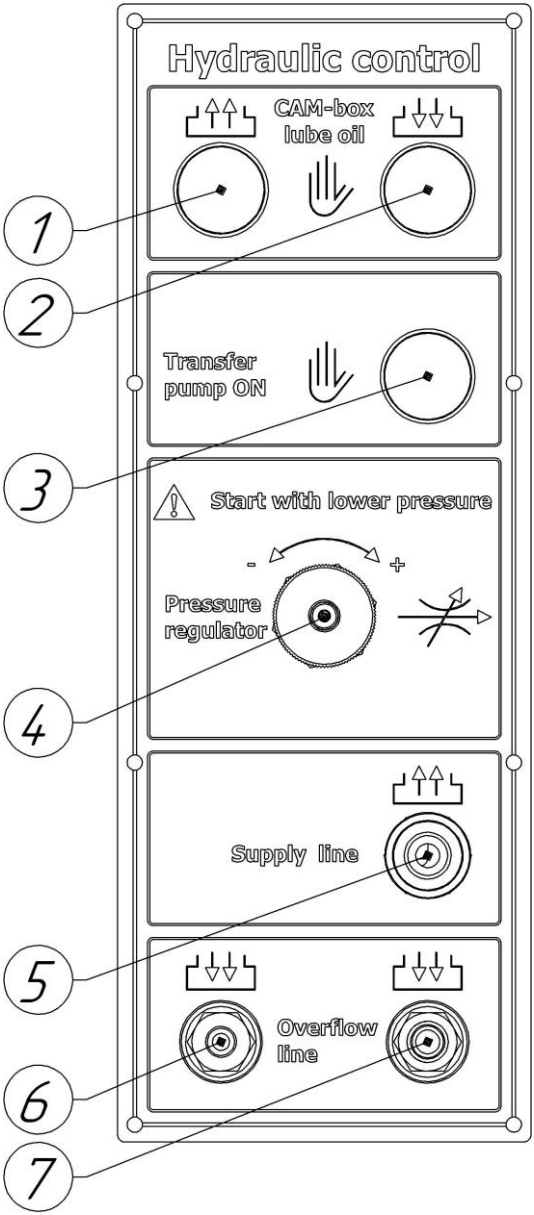

Figure 15. 15. Hydraulic control panel

The hydraulic control panel contains:

Position	Description
1	Button for draining oil from Cam-box;
2	Oil filling button in Cam-box;
3	Button for manual start of the booster pump;
4	Test fluid pressure regulator in the supply line;
5	Coupling for connecting the test fluid supply line to the EUI \ EUP adapter;
6	Coupling for connecting the return line from the EUP adapter from under the plunger;
7	Coupling for connecting the test liquid backflow line from the EUI \ EUP adapter.

The Cam-box drain button is used to decrease the oil level or to change the cam if necessary. To do this, press the button and hold until the level drops to the required level, release the button upon reaching.

The Cam-box oil filling button is used to increase the oil level or when it is necessary to change the filling of an empty case. To do this, press the button and hold until the level rises to the required level, upon reaching the button, release the button.

The manual start button of the booster pump is used to start the booster pump without starting the rotation of the stand drive. This allows you to set the required pressure in the test fluid supply line, or visually determine and eliminate leaks in the supply / backflow line from the UIS-UPS. Momentary button, while pressed, the booster pump is started. The pressure is displayed on the monitor when the bench control program is running.

The regulator sets the pressure required to test the UIS-UPS under test.

16. Overall and installation dimensions

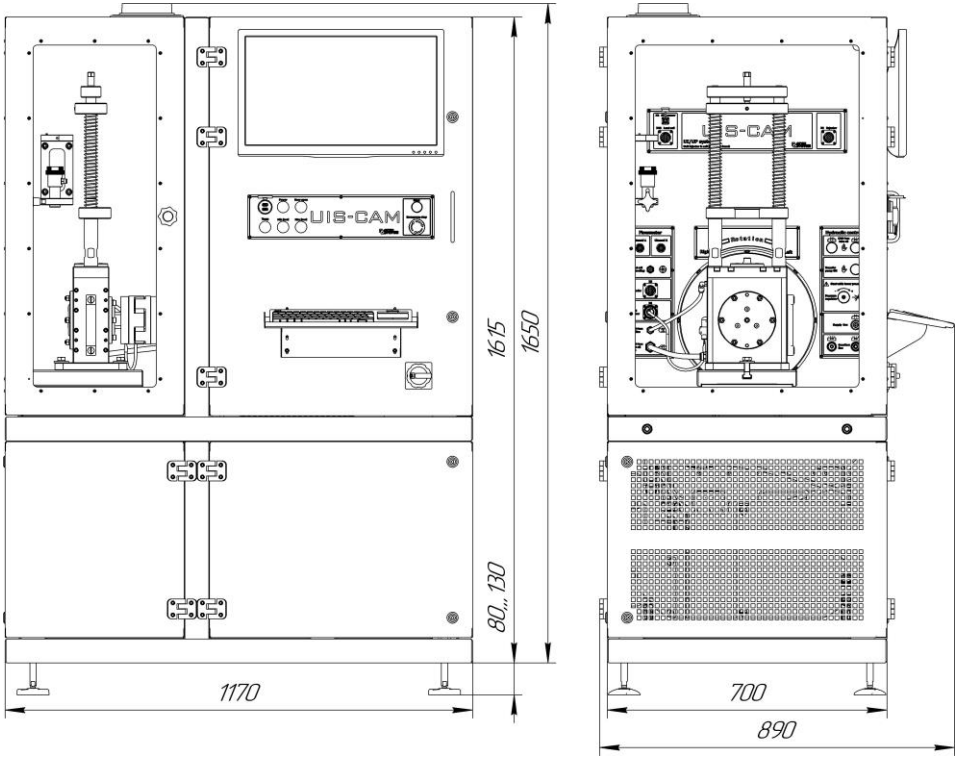

Figure 16. UIS-CAM – Overall and installation dimensions

17. Placement in the workshop

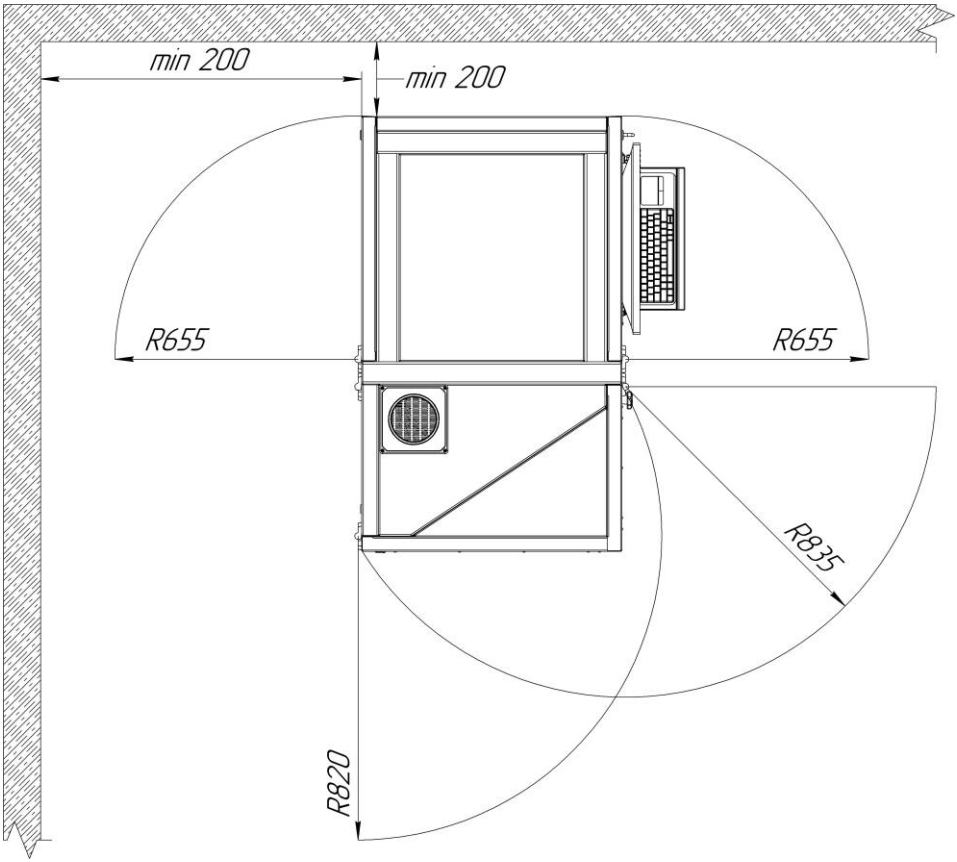

Figure 17. Placement in the workshop

For convenient access when servicing components and assemblies, the UIS-CAM stand should be positioned taking into account the space required for the unhindered opening of the doors. The door opening radii are shown in the figure. In the absence of sufficient space in the room, the stand should be positioned so as to ensure the operation of the stand cooling system. The distance between the back and side walls of the stand to the wall was at least 200mm.

Appendix No. 1 Warranty card

Warranty card No. _____

UIS-CAM bench - test bench for checking and coding of EUI electronically controlled unit injectors and EUP pumping sections.

Warranty repair and maintenance of the UIS-CAM stand is performed by the company _____.

Address _____

Tel. _____

Fax. _____

Date of sale "____"_____ _____